KEROVIT AURUM TOILET

ASTRID

WALLHUNG CLOSET

TECHNICAL SPECIFICATIONS

MODEL:	ASTRID
CODE:	10003W
DIMENSION:	570X360X345 MM
WEIGHT:	23 KG
MATERIAL USED:	VITREOUS CHINA
RIM TYPE:	RIMLESS
AVAILABLE COLOUR:	WHITE GLOSS
TEST STANDARD:	IS-2556
SEAT COVER:	SLIM DURAPLAST SEAT COVER
FLUSH TYPE:	WASHDOWN



TECHNICAL DRAWING

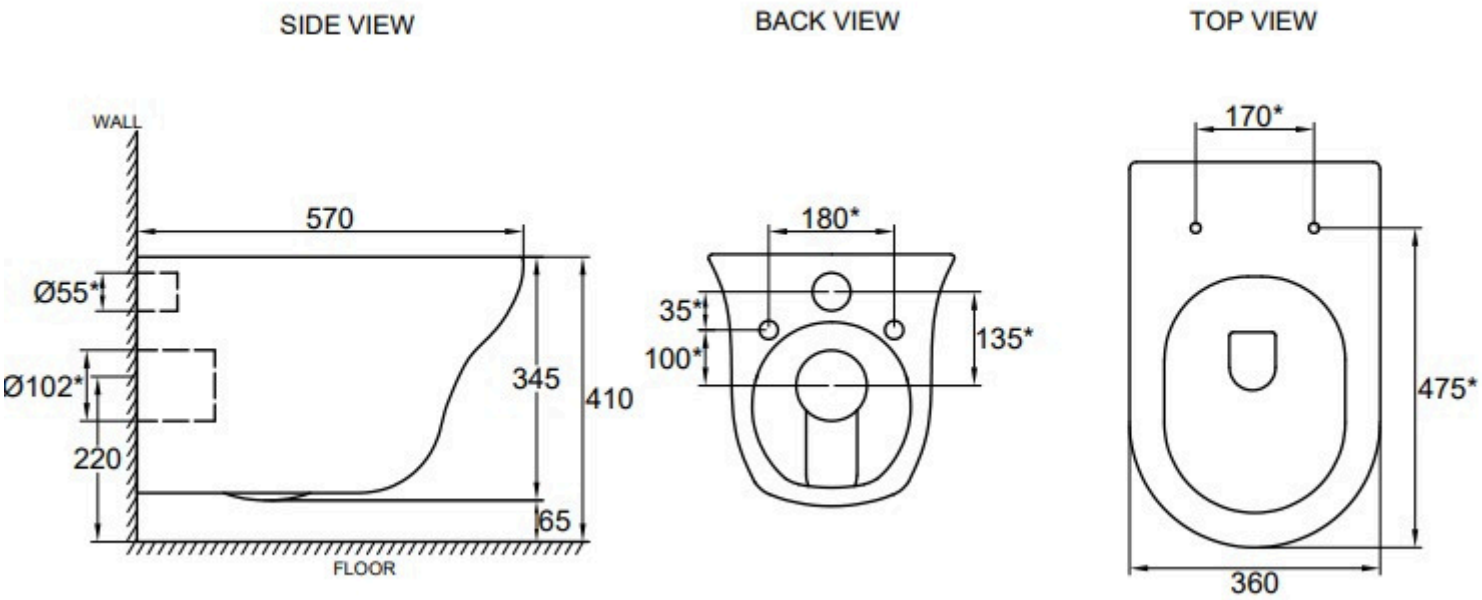

TOLERANCE OF THE CERAMIC PRODUCTS WITH DIMENSIONS ≥75 MM IS ± 2 % OR ± 2 MM OF THE SPECIFIED DIMENSION WHICHEVER IS MORE, AND DIMENSIONS <75 IMENSION WHICHEVER IS MORE.
AS A PART OF CONTINUOUS IMPROVEMENT, KEROVIT RESERVES THE RIGHT TO MODIFY THE PRODUCTS WITHOUT ANY PRIOR INFORMATION. THE ACCESSORIES SHOWN ARE FOR VISUAL REFERENCE ONLY.