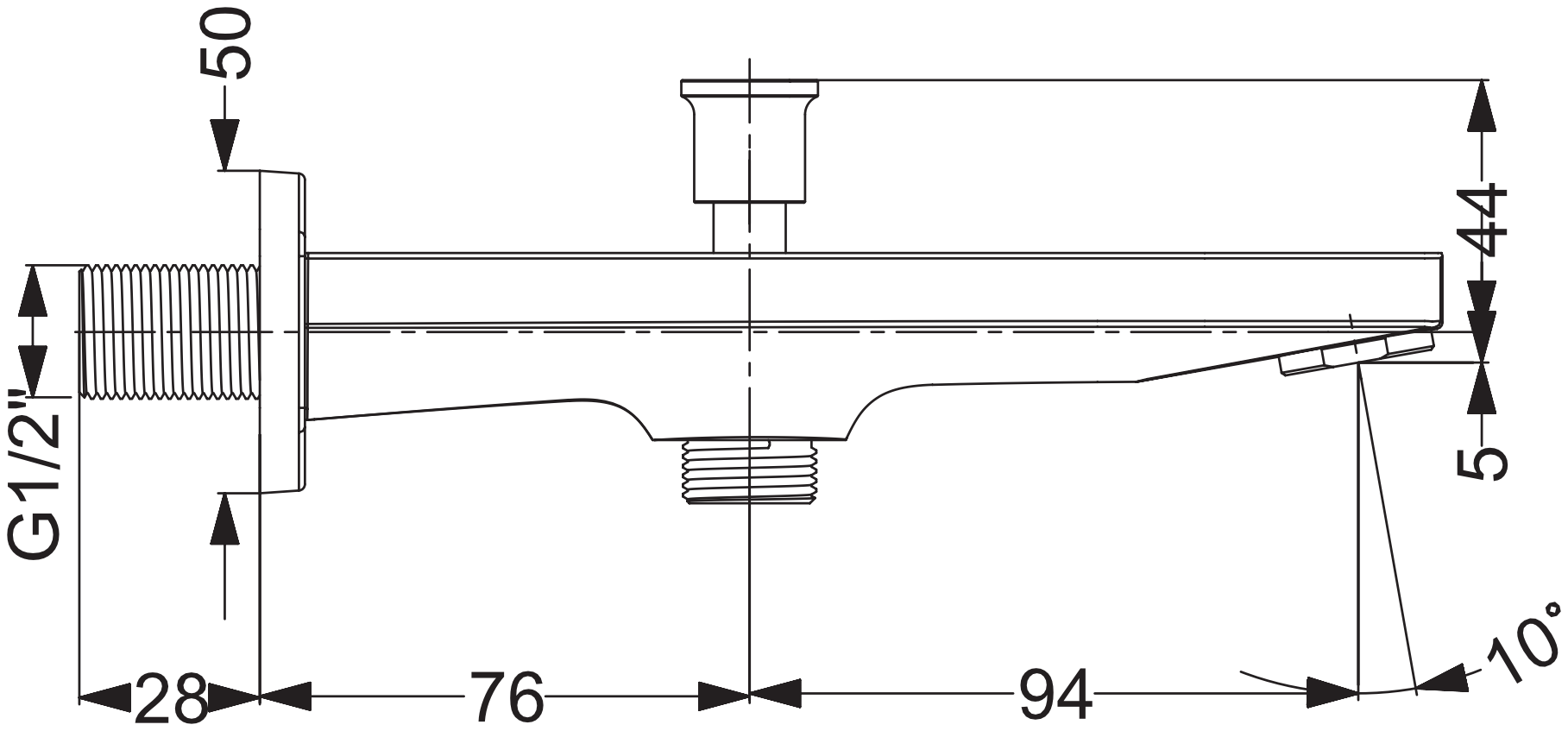
50
44
5
G1/2"
28
76
94
10°