KEROVIT AURUM TOILET

REJUVE

WALLHUNG CLOSET

TECHNICAL SPECIFICATIONS

MODEL:	REJUVE
CODE:	10005W/GB
DIMENSION:	540X360X330 MM
WEIGHT:	23 KG
MATERIAL USED:	VITREOUS CHINA
RIM TYPE:	RIMFREE
AVAILABLE COLOUR:	WHITE / BLACK GLOSS
TEST STANDARD:	IS-2556
SEAT COVER:	SLIM DURAPLAST / PP SEAT COVER
FLUSH TYPE:	WASHDOWN



TECHNICAL DRAWING

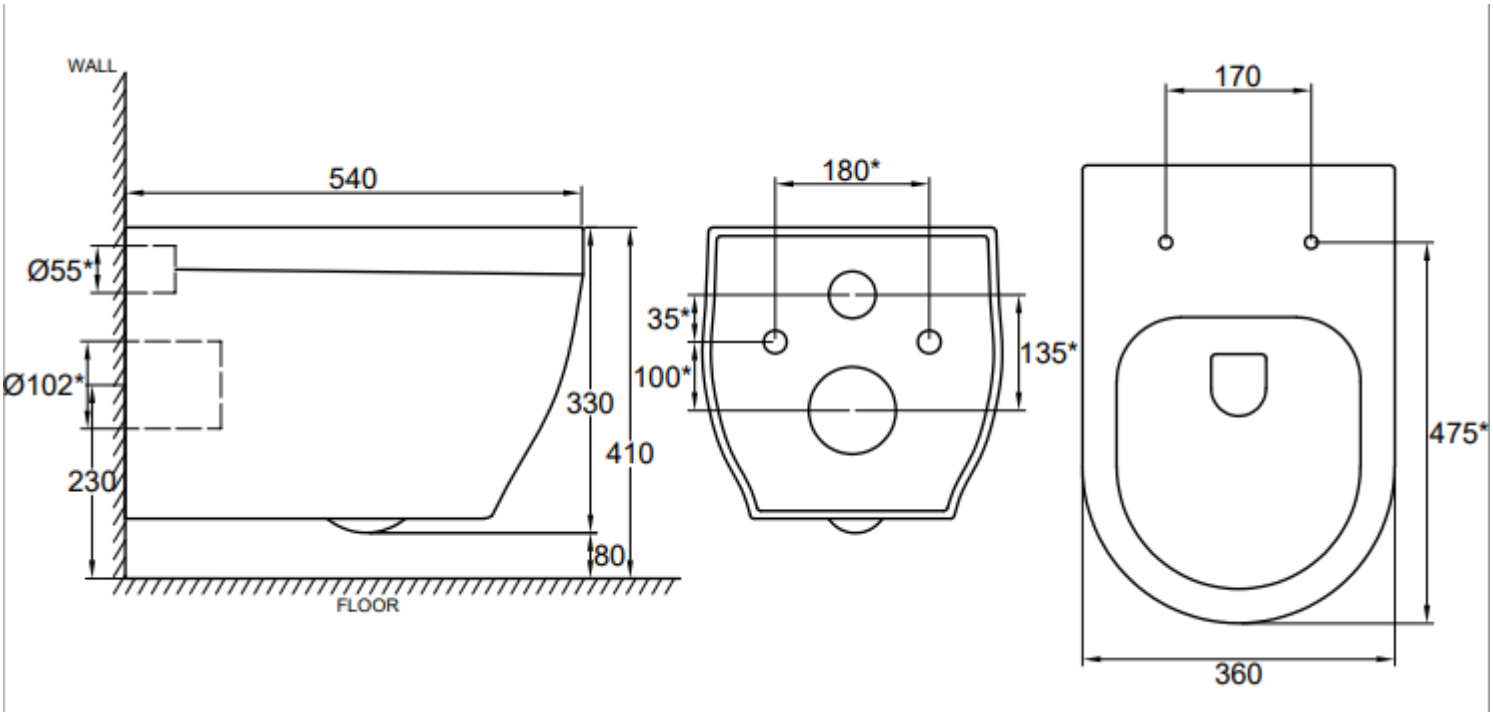

TOLERANCE OF THE CERAMIC PRODUCTS WITH DIMENSIONS ≥75 MM IS ± 2 % OR ± 2 MM OF THE SPECIFIED DIMENSION WHICHEVER IS MORE, AND DIMENSIONS <75 IMENSION WHICHEVER IS MORE.
AS A PART OF CONTINUOUS IMPROVEMENT, KEROVIT RESERVES THE RIGHT TO MODIFY THE PRODUCTS WITHOUT ANY PRIOR INFORMATION. THE ACCESSORIES SHOWN ARE FOR VISUAL REFERENCE ONLY.