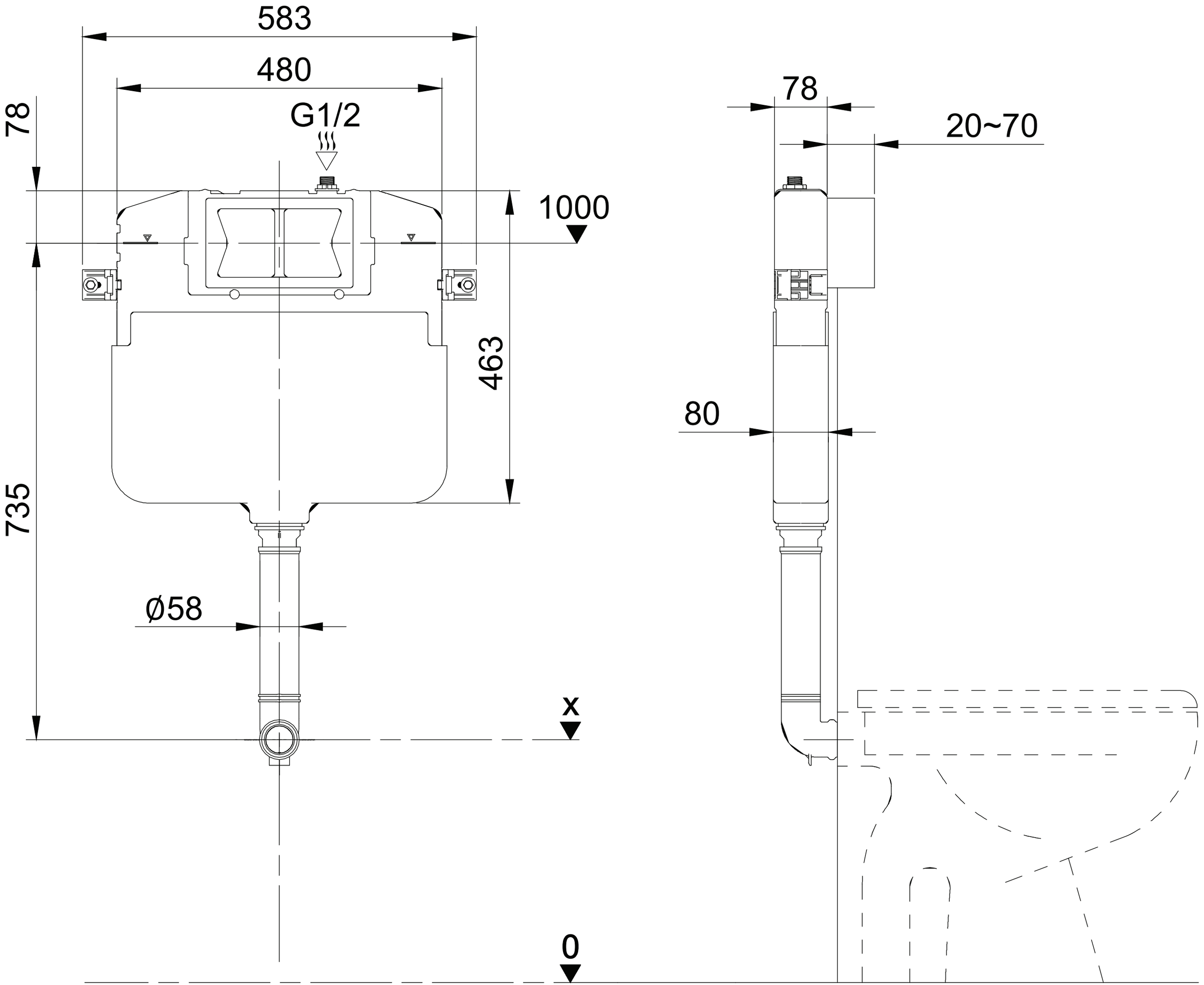
583
480
78
G1/2
1000
463
735
Ø58
x
0
78
20~70
80