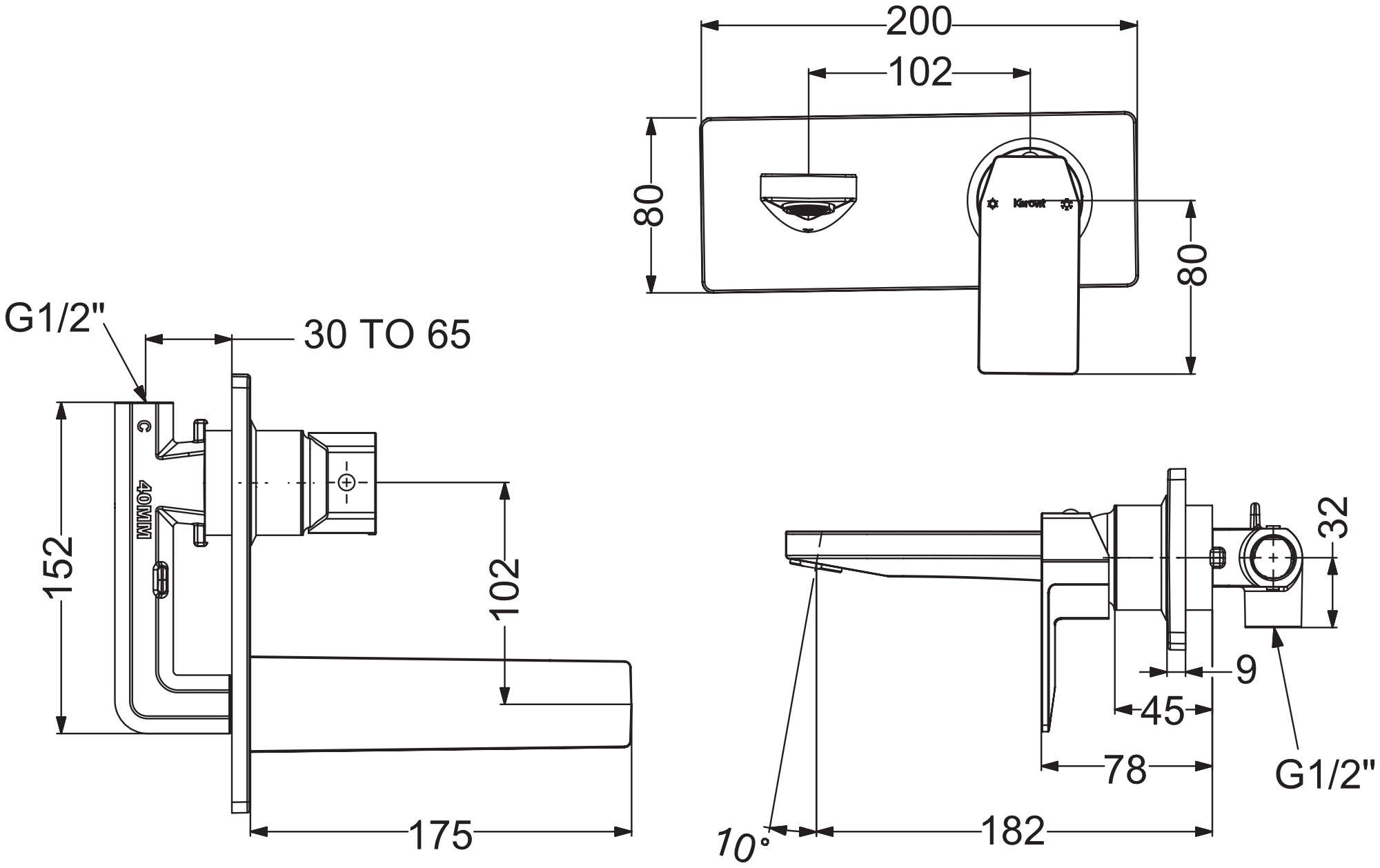
200
102
80
80
Karout
G1/2"
30 TO 65
C
40MM
152
102
175
32
9
45
78
G1/2"
10°
182