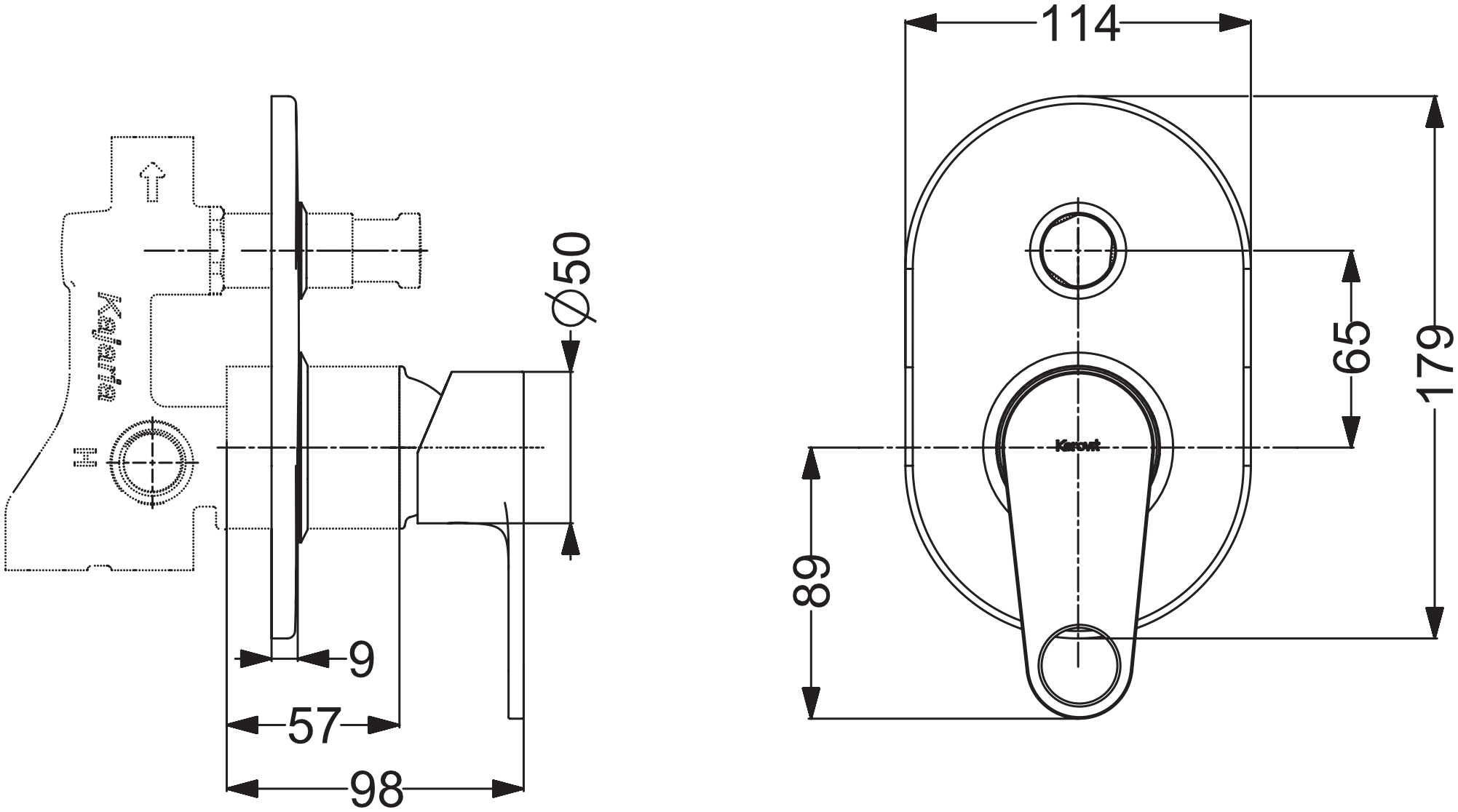
114
179
65
89
Karout
Karout
Ø50
9
57
98